Globe valves in metal and plastic

The correct valve selection creates security

Within the various areas of application, valves are subject to widely different requirements. Chemical and physical properties of the working media have a direct influence on material selection of the components. Moreover, both mechanical and process-specific requirements have an immediate effect on the valve. To do justice to the given operating conditions on an individual basis, GEMÜ offers its customers a wide range of valve types as well as many material, connection and actuation options. Basically, the manufacturer's information and the interaction between the operating pressure / temperature must be taken into account.

GEMÜ is your valve and instrumentation partner. State-of-the-art factory equipment and machinery plus a motivated team ensure the best service.
A world-wide network of distributors and sales subsidiaries guarantee that products and services reach you quickly and directly. We are constantly making investments in order to optimise our existing products and to develop new products. Thus we can provide technical solutions for individual applications.

Table of contents

Globe and control valves
pneumatically operated . . . . . 4 - 5
Globe and control valves
motorized and manually operated . . . . . 6 -7
Functional principle. . . . . 8 - 9
GEMÜ 514
2/2-way angle seat globe valve, pneumatically operated . . 10
GEMÜ 550
2/2-way angle seat globe valve, pneumatically operated . . 11
GEMÜ 554
2/2-way angle seat globe valve, pneumatically operated . . 12
GEMÜ 555
2/2-way angle seat globe valve, pneumatically operated,
for steam applications 13
GEMÜ 549 eSyDrive
2/2-way angle seat globe valve, motorized. 14
GEMÜ 530
2/2-way globe valve, pneumatically operated 15
GEMÜ 537
2/2-way globe valve, manually operated. 16
GEMÜ 532
2/2-way globe valve, manually operated. 17
GEMÜ 534
2/2-way globe valve, pneumatically operated 18
GEMÜ 536
2/2-way globe valve, pneumatically operated 19
GEMÜ 548
2/2-way angle seat globe valve, motorized. 20
GEMÜ 312
3/2-way globe valve, pneumatically operated 21
GEMÜ 314
3/2-way globe valve, pneumatically operated 22
GEMÜ 352
3/2-way globe valve, pneumatically operated 23
GEMÜ 354
3/2-way globe valve, pneumatically operated 24
GEMÜ 538
2/2-way globe valve, motorized 25
GEMÜ 539 eSyDrive
2/2-way globe valve, motorized 26
GEMÜ 342
3/2-way globe valve, motorized 27
GEMÜ 344
3/2-way globe valve, motorized 28
GEMÜ 563
2/2-way control valve, motorized 29
GEMÜ 566
2/2-way control valve, manual, pneumatic, motorized 30
GEMÜ 567 BioStar control
2/2-way control valve, manually, pneumatically operated. . 31
GEMÜ 553
2/2-way globe valve, modular design, pneumatically
and/or manually operated 32
GEMÜ 505
2/2-way angle seat globe valve, manually operated,
for steam applications 33
GEMÜ 507
2/2-way angle seat globe valve, manually operated 34
Selection and use of globe valves. . . . . 35 - 38
Selection of globe valves for control tasks . . . . . 39 - 40
Positioners and process controllers - Overviewl . . . . . 41 - 45
Flow restrictors for globe valves 46
Control valves - Overview. 47
Actuator replacement 48
Overview of R-Numbers . . . . . 49 - 50
Combi switchboxes and electrical position indicators
for pneumatically operated linear valves. 51
Kv value 52
Basic terms of control technology . . . . . 53 - 60
Specification sheet
for designing regulating cones for globe valves. 61
GEMÜ standard regulating cones 62
Worldwide presence 63

Globe and control valves
pneumatically operated

Product overview

2/2-way angle seat globe valves Open/Close and control version				2/2-way globe valves Open/Close and control version		
GEMÜ 514	GEMÜ 554	GEMÜ 550	GEMÜ 555	GEMÜ 532	GEMÜ 534	GEMÜ 530

Positioners				Process controller	Flow restrictors*
GEMÜ 1434 µPos	GEMÜ 1435 ePos	GEMÜ 1436 cPos	GEMÜ 1436 cPos eco	GEMÜ 1436 cPos	

- linear
- modified equal-percentage

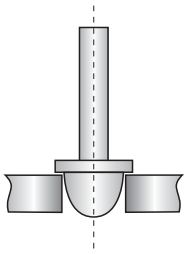

* Customised regulating cones and control valve versions on request.

	3/2-way globe valves Open/Close and control version				2/2-way control valves	
GEMÜ 536	GEMÜ 312	GEMÜ 314	GEMÜ 352	GEMÜ 354	GEMÜ 566	GEMÜ 567

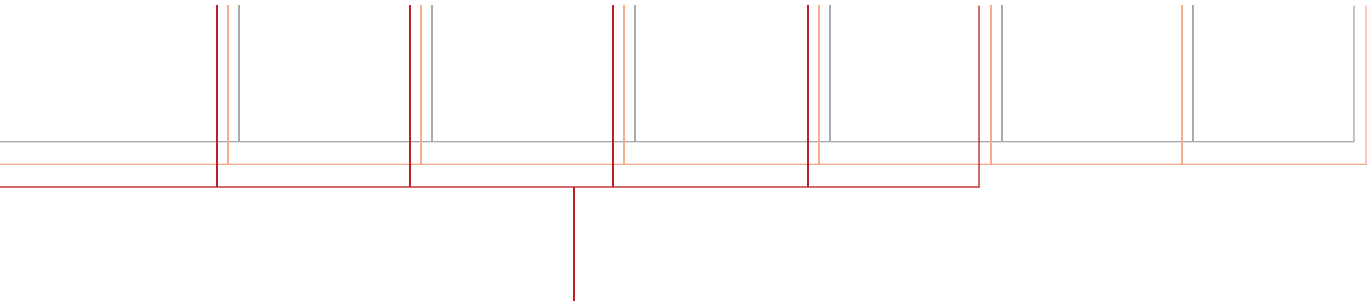

Position indicators, combi switchboxes and accessories			
GEMÜ 1236	GEMÜ 4242	GEMÜ 4222	GEMÜ 0324

Globe and control valves
motorized and manually operated

Product overview

2/2-way angle seat globe valves Open/close and control version		2/2-way globe valves Open/Close and control version		3/2-way globe valves Open/Close	
GEMÜ 548	GEMÜ 549	GEMÜ 538	GEMÜ 539	GEMÜ 342	GEMÜ 344

Integrated positioner and process controller

Flow restrictors*

- linear
- modified equal-percentage

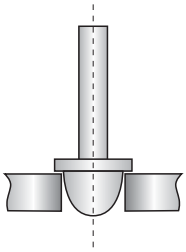

* Customised regulating cones and control valve versions on request.

2/2-way control valve		2/2-way angle seat globe valves Open/Close		2/2-way globe valves Open/Close	2/2-way control valves	
GEMÜ 563	GEMÜ 566	GEMÜ 507	GEMÜ 505	GEMÜ 537	GEMÜ 566	GEMÜ 567

Integrated positioner and process controller

Functional principle

Within the various areas of application, valves are subject to widely different requirements. Chemical and physical properties of the working media have a direct influence on material selection of the components. Moreover, both mechanical and process-specific requirements have an immediate effect on the valve. To do justice to the given operating conditions on an individual basis, GEMÜ offers its customers a wide range of valve types as well as many material, connection and actuation options.

Basically, the manufacturer's information and the interaction between the operating pressure / temperature must be taken into account. This brochure describes GEMÜ industrial globe valves. If you determine from the following information that a different valve type is necessary for your specific operational requirements, please ask us.

Features

- Depending on diameter and materials of construction, up to 40 bar operating pressure and 180 °C operating temperature (higher temperatures on request)
- Very suitable for high cycle duties and dosing
- Good control characteristics
- 2/2 and 3/2-way valves available

Areas of use

- Clean chemically inert, slightly corrosive liquid media but also gases and steam

Application

- Industrial gas manufacturing and distribution
- Biogas production
- Industrial and sterile steam generation and distribution
- Heat exchanger systems
- Polystyrene foam production and packaging industry
- Beverage industry
- Foodstuff industry
- Dyeing and cleaning
- Filling systems
- Air and gas control

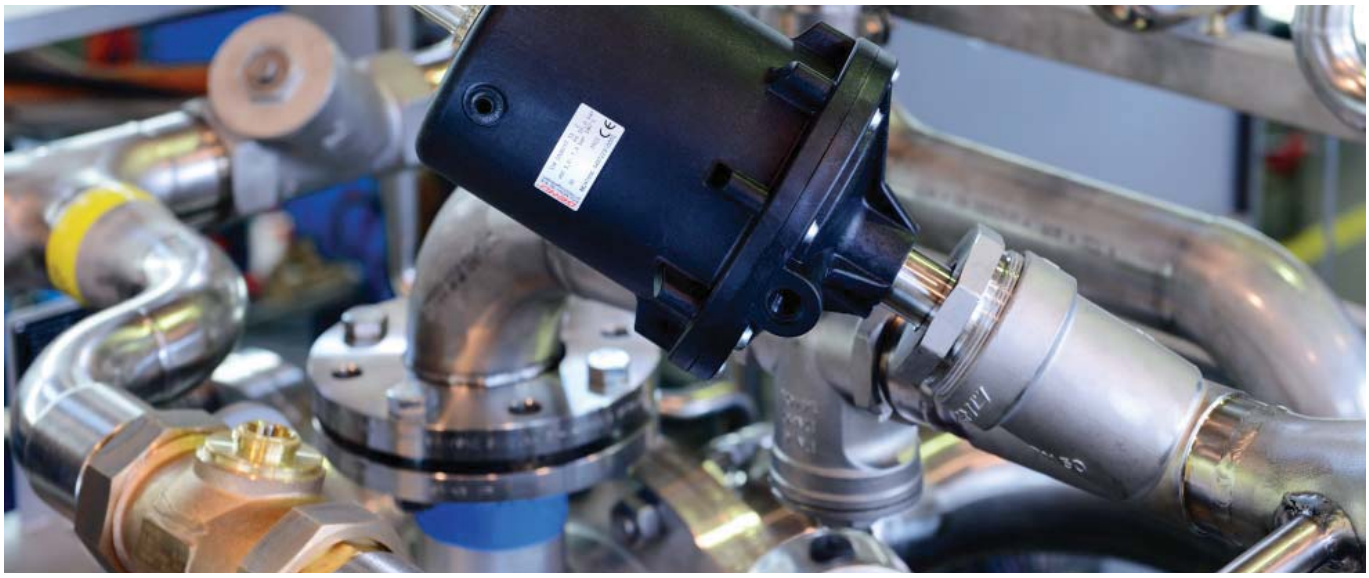

Globe valve

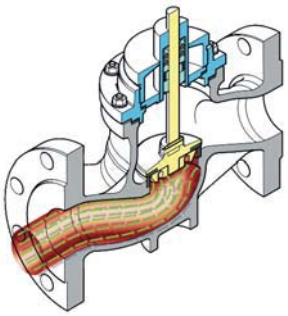

closed

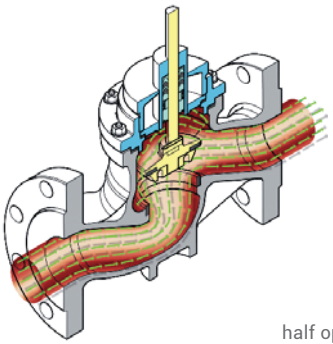

half open

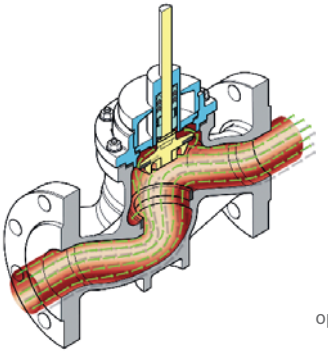

open

Angle seat globe valve

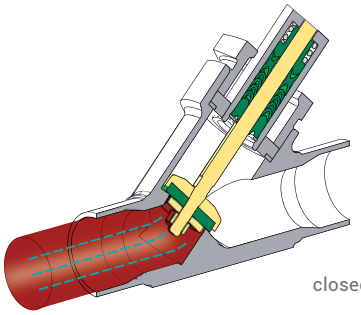

closed

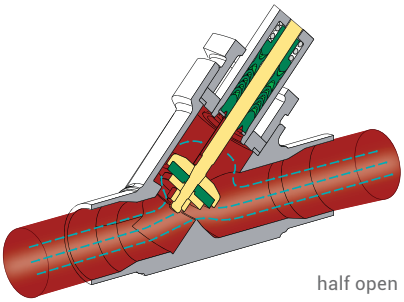

half open

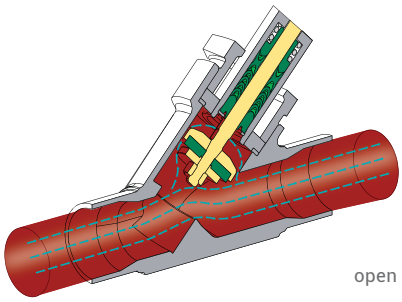

open

GEMÜ 514

2/2-way angle seat globe valve, pneumatically operated

Features

- Pneumatic aluminium piston actuator
- Seal at the valve seat made of PTFE or steel
- Available as shut off or control valve
- Standard gland packing suitable for vacuum up to 20 mbar (abs.)
- Suitable for contact with food according to Regulation (EC) No. 1935/2004 (optional)
- Option with metal bellows available
- Control medium connection can be rotated through 360°

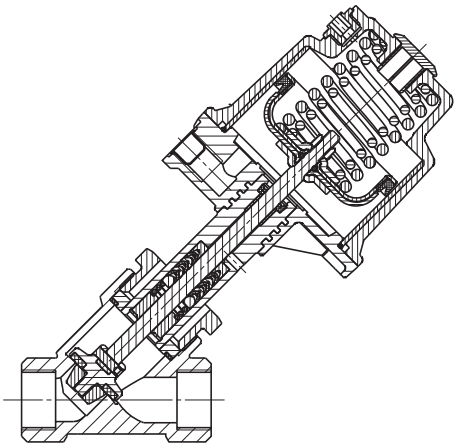

Safety Integrity Level GEMÜ SIL IEC 61508 / IEC 61511

CRN

Actuator	Pneumatic
Nominal size	DN 10 to 80
Body configuration	2/2-way body, angle valve body E (only in 1.4408 cast stainless steel, DN 15 to 50)
Connection type	Butt weld spigots, threaded connections, flanges. Different standards and designs available
Control function	Normally closed (NC), Normally open (NO), Double acting (DA)
Valve body material	Cast bronze, investment casting, cast stainless steel
Media temperature *	-10 to 180 °C
Operating pressure **	0 to 25 bar
Seat seal	PTFE, PTFE glass reinforced, steel

* dependent on nominal size and operating pressure; ** dependent on nominal size and operating temperature

GEMÜ 550

2/2-way angle seat globe valve, pneumatically operated

Features

- Suitable for inert, corrosive, liquid and gaseous media
- Faster actuator replacement and free actuator positioning due to fixing via union nut
- Available as shut off or control valve
- Versions according to ATEX on request
- Suitable for contact with food according to Regulation (EC) No. 1935/2004 (K-no. 1935)
- Standard gland packing suitable for vacuum up to 20 mbar (abs.)

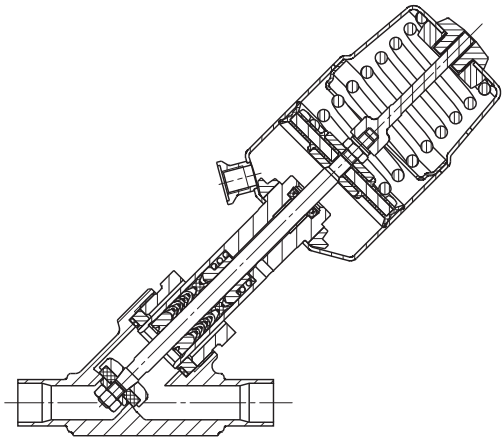

Safety Integrity Level GEMÜ SIL IEC 61508 / IEC 61511

CRN

Actuator	Pneumatic
Nominal size	DN 6 to 80
Body configuration	2/2-way body, angle valve body E (only in 1.4408 cast stainless steel, DN 15 to 50)
Connection type	Butt weld spigots, threaded connections, flanges, clamp connections. Different standards and designs available
Control function	Normally closed (NC), Normally open (NO), Double acting (DA)
Valve body material	Investment casting, cast stainless steel, forged body
Media temperature *	-10 to 180 °C
Operating pressure **	0 to 25 bar
Seat seal	PTFE, PTFE glass reinforced

* dependent on nominal size and operating pressure; ** dependent on nominal size and operating temperature

GEMÜ 554

2/2-way angle seat globe valve, pneumatically operated

Features

- Suitable for inert, corrosive, liquid and gaseous media
- Faster actuator replacement and free actuator positioning due to fixing via union nut
- Available as shut off or control valve
- Versions according to ATEX on request
- Optionally suitable for contact with food according to Regulation (EC) No. 1935/2004 (K-no. 1935)
- Standard gland packing suitable for vacuum up to 20 mbar (abs.)

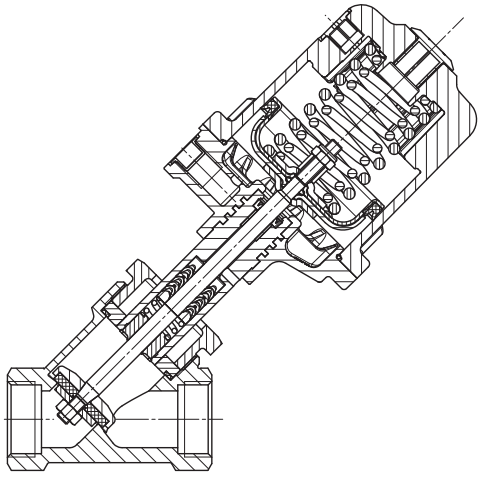

Safety Integrity Level GEMÜ SIL IEC 61508 / IEC 61511

CRN

Actuator	Pneumatic
Nominal size	DN 6 to 80
Body configuration	2/2-way body, angle valve body E (only in 1.4408 cast stainless steel, DN 15 to 50)
Connection type	Butt weld spigots, threaded connections, flanges, clamp connections. Different standards and designs available
Control function	Normally closed (NC), Normally open (NO), Double acting (DA)
Valve body material	Cast bronze, investment casting, cast stainless steel, forged body
Media temperature *	-10 to 180 °C
Operating pressure **	0 to 25 bar
Seat seal	PTFE, PTFE glass reinforced, PFA

* dependent on nominal size and operating pressure; ** dependent on nominal size and operating temperature

GEMÜ 555

2/2-way angle seat globe valve, pneumatically operated, for steam applications

Features

- Suitable for pure steam and gaseous media
- Inner surface of valve body down to ≤ Ra 0.4 µm, outer surface electropolished
- Free from non-ferrous metals
- Stainless steel bellows
- Welded valve plug
- Low maintenance, fixed seat plug (without threads)
- Fast actuator replacement possible
- Standard integral optical position indicator
- Traceability of all media wetted parts
- Suitable for contact with food according to Regulation (EC) No. 1935/2004

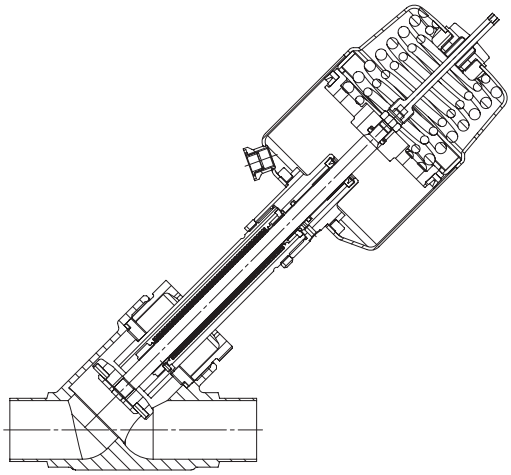

Actuator	Pneumatic
Nominal size	DN 8 to 80
Body configuration	2/2-way body
Connection type	Butt weld spigots, clamp connections. Different standards and designs available
Control function	Normally closed (NC)
Valve body material	Block material, investment casting
Media temperature *	-10 to 180 °C
Operating pressure **	0 to 10 bar
Seat seal	PTFE

* dependent on nominal size and operating pressure; ** dependent on nominal size and operating temperature

GEMÜ 549 eSyDrive

2/2-way angle seat globe valve, motorized

Features

- Linear or modified equal-percentage control characteristics
- Kv values from approx. 38 - 120 m³/h (depending on nominal size, valve seat and regulating cone design)
- High flow rates
- Force and speed are variably adjustable
- Extensive diagnostic facilities
- Operable via web interface eSy-Web
- Integral optical position indicator and LED high visibility display
- Standard gland packing suitable for vacuum up to 20 mbar (abs.)

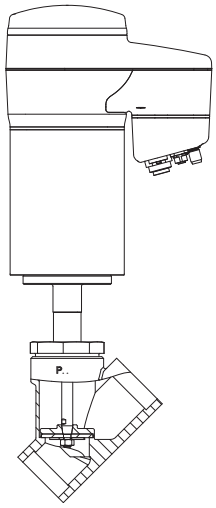

Actuator	Motorized
Nominal size	DN 40 to 80
Body configuration	2/2-way body, angle valve body
Connection type	Butt weld spigots, threaded connections, flanges. Different standards and designs available
Voltage	24 V DC
Valve body material	Investment casting, forged body
Media temperature *	-10 to 180 °C
Operating pressure **	0 to 10 bar
Seat seal	PTFE, PTFE glass reinforced

* dependent on nominal size and operating pressure; ** dependent on nominal size and operating temperature

GEMÜ 530

2/2-way globe valve, pneumatically operated

Features

- Suitable for inert, corrosive, liquid and gaseous media
- Available as shut off or control valve
- Free from non-ferrous metals
- Versions according to ATEX on request
- Standard gland packing suitable for vacuum up to 20 mbar (abs.)

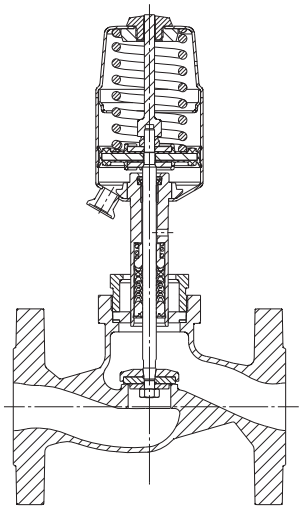

Safety Integrity Level GEMÜ SIL IEC 61508 / IEC 61511

CRN

Actuator	Pneumatic
Nominal size	DN 15 to 100
Body configuration	2/2-way body
Connection type	Flanges. Different standards and designs available
Control function	Normally closed (NC), Normally open (NO), Double acting (DA)
Valve body material	Cast stainless steel, SG iron
Media temperature *	-10 to 180 °C
Operating pressure **	0 to 40 bar
Seat seal	PTFE, PTFE glass reinforced

* dependent on nominal size and operating pressure; ** dependent on nominal size and operating temperature

GEMÜ 537

2/2-way globe valve, manually operated

Features

- Valve bodies available in SG iron and stainless steel
- Good flow capability and compact design
- Modular system, the valve can also later be retrofitted with pneumatic actuators
- Optionally suitable for contact with food according to Regulation (EC) No. 1935/2004 (K-no. 1935)
- Standard gland packing suitable for vacuum up to 20 mbar (abs.)
- Available as shut off or control valve

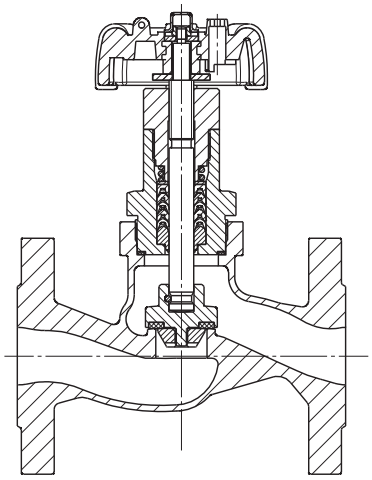

CRN

Operator	Manual
Nominal size	DN 15 to 50
Body configuration	2/2-way body
Connection type	Flanges. Different standards and designs available
Control function	Manually operated, manually operated with handwheel clamp
Valve body material	Cast stainless steel, SG iron
Media temperature *	-10 to 180 °C
Operating pressure **	0 to 36 bar
Seat seal	PTFE, PTFE glass reinforced

* dependent on nominal size and operating pressure; ** dependent on nominal size and operating temperature

GEMÜ 532

2/2-way globe valve, manually operated

Features

- Pneumatic aluminium piston actuator
- Seal at the valve seat made of PTFE or steel
- Available as shut off or control valve
- Standard gland packing suitable for vacuum
- Suitable for contact with food according to Regulation (EC) No. 1935/2004 (optional)
- Option with metal bellows available
- Control medium connection can be rotated through 360°

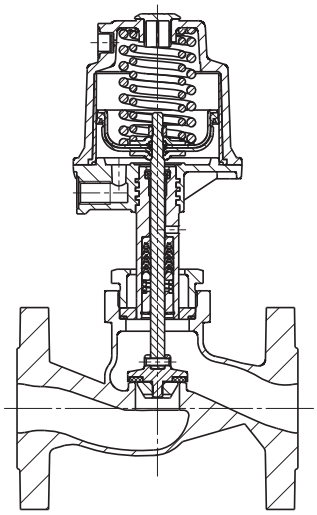

Safety Integrity Level GEMÜ SIL IEC 61508 / IEC 61511

CRN

Actuator	Pneumatic
Nominal size	DN 15 to 100
Body configuration	2/2-way body
Connection type	Flanges. Different standards and designs available
Control function	Normally closed (NC), Normally open (NO), Double acting (DA)
Valve body material	Cast stainless steel, SG iron
Media temperature *	-10 to 180 °C
Operating pressure **	0 to 40 bar
Seat seal	PTFE, PTFE glass reinforced, steel

* dependent on nominal size and operating pressure; ** dependent on nominal size and operating temperature

GEMÜ 534

2/2-way globe valve, pneumatically operated

Features

- Suitable for inert, corrosive, liquid and gaseous media
- Valve bodies available in SG iron and stainless steel
- Available as shut off or control valve
- Free from non-ferrous metals
- Versions according to ATEX on request
- Plastic piston actuator
- Standard gland packing suitable for vacuum up to 20 mbar (abs.)

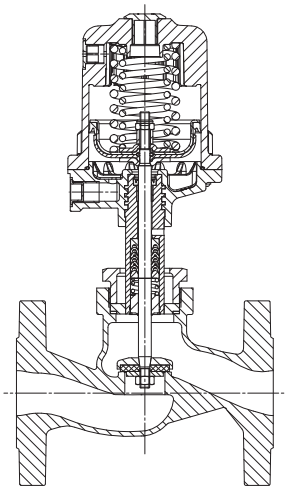

Safety Integrity Level GEMÜ SIL IEC 61508 / IEC 61511

CRN

Actuator	Pneumatic
Nominal size	DN 15 to 100
Body configuration	2/2-way body
Connection type	Flanges. Different standards and designs available
Control function	Normally closed (NC), Normally open (NO), Double acting (DA)
Valve body material	Cast stainless steel, SG iron
Media temperature *	-10 to 180 °C
Operating pressure **	0 to 40 bar
Seat seal	PTFE, PTFE glass reinforced

* dependent on nominal size and operating pressure; ** dependent on nominal size and operating temperature

GEMÜ 536

2/2-way globe valve, pneumatically operated

Features

- Good flow capability
- Broad range of operating temperatures and pressures
- Available as shut off or control valve
- Accessories:
  Stroke limiter / optical position indicator / manual override / pilot valve with manual override / electrical position indicators / electro-pneumatic positioners
- Versions according to ATEX on request
- Exact controllability due to guided regulating cage and membrane actuator

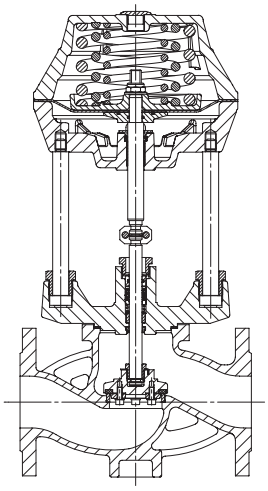

CRN

Actuator	Pneumatic
Nominal size	DN 15 to 150
Body configuration	2/2-way body
Connection type	Flanges. Different standards and designs available
Control function	Normally closed (NC), Normally open (NO), Double acting (DA)
Valve body material	Cast stainless steel, SG iron
Media temperature *	-10 to 180 °C
Operating pressure **	0 to 40 bar
Seat seal	PTFE, PTFE glass reinforced, steel

* dependent on nominal size and operating pressure; ** dependent on nominal size and operating temperature

GEMÜ 548

2/2-way angle seat globe valve, motorized

Features

- Open/Close function or control version
- Actuating speed and control parameters easily adjustable
- Optimised initialisation and valve control
- Parameterisation during operation
- Torque limitation
- Electronic limitation of opening and closing stroke
- Available as shut off or control valve
- Positioner and process controller are synchronised with each other
- Optional integrated emergency power supply module with selectable fail-safe condition
- Version with bellows (option)

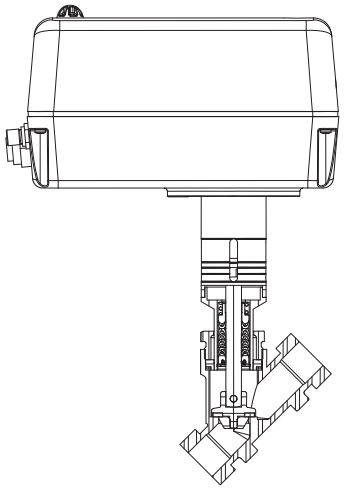

Actuator	Motorized
Nominal size	DN 25 to 80
Body configuration	2/2-way body, angle valve body E (only in 1.4408 cast stainless steel, DN 15 to 50)
Connection type	Butt weld spigots, threaded connections, clamp connections. Different standards and designs available
Voltage	12, 24 V DC 120, 230 V AC 50/60Hz
Valve body material	Cast bronze, investment casting, cast stainless steel
Media temperature *	-10 to 180 °C
Operating pressure **	0 to 25 bar
Seat seal	PTFE

* dependent on nominal size and operating pressure; ** dependent on nominal size and operating temperature

GEMÜ 312

3/2-way globe valve, pneumatically operated

Features

- Suitable for inert liquid and gaseous media
- Control medium: inert gases
- Materials of all media wetted parts can be selected to suit relevant applications
- With GEMÜ 312 valves control processes which normally require two separate valves can be combined, for example: mixing, separating, aerating and de-aerating
- Robust low maintenance aluminium piston actuator
- Simple adaptation for use as a control valve

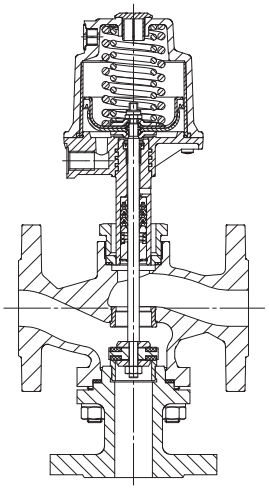

Actuator	Pneumatic
Nominal size	DN 15 to 100
Body configuration	Multi-port
Connection type	Flanges. Different standards and designs available
Control function	Normally closed (NC)
Valve body material	Cast iron
Media temperature *	-10 to 180 °C
Operating pressure **	0 to 16 bar
Seat seal	PTFE, PTFE glass reinforced

* dependent on nominal size and operating pressure; ** dependent on nominal size and operating temperature

GEMÜ 314

3/2-way globe valve, pneumatically operated

Features

- Suitable for inert liquid and gaseous media
- Control medium: inert gases
- Materials of all media wetted parts can be selected to suit relevant applications
- With GEMÜ 314 valves control processes which normally require two separate valves can be combined, for example: mixing, separating, aerating and de-aerating
- Robust low maintenance aluminium piston actuator
- Simple adaptation for use as a control valve

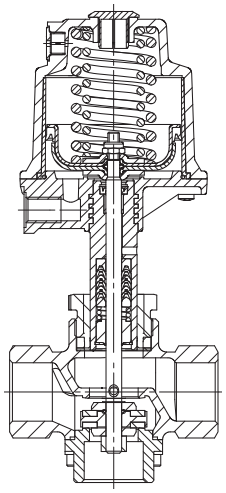

Actuator	Motorized
Nominal size	DN 25 to 80
Body configuration	2/2-way body, angle valve body E (only in 1.4408 cast stainless steel, DN 15 to 50)
Connection type	Butt weld spigots, threaded connections, clamp connections. Different standards and designs available
Voltage	12, 24 V DC 120, 230 V AC 50/60Hz
Valve body material	Cast bronze, investment casting, cast stainless steel
Media temperature *	-10 to 180 °C
Operating pressure **	0 to 25 bar
Seat seal	PTFE

* dependent on nominal size and operating pressure; ** dependent on nominal size and operating temperature

GEMÜ 352

3/2-way globe valve, pneumatically operated

Features

- Suitable for inert liquid and gaseous media
- Control medium: inert gases
- Materials of all media wetted parts can be selected to suit relevant applications
- With GEMÜ 352 valves control processes which normally require two separate valves can be combined, for example: mixing, separating, aerating and de-aerating
- Robust low maintenance plastic piston actuator
- Simple adaptation for use as a control valve
- Versions according to ATEX on request

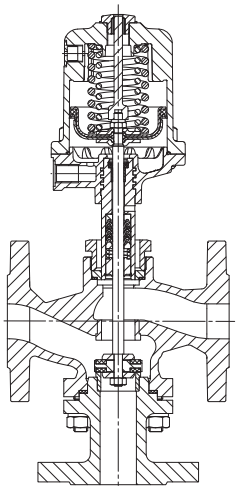

Actuator	Pneumatic
Nominal size	DN 15 to 100
Body configuration	Multi-port
Connection type	Flanges. Different standards and designs available
Control function	Normally closed (NC)
Valve body material	Cast iron
Media temperature *	-10 to 180 °C
Operating pressure **	0 to 16 bar
Seat seal	PTFE, PTFE glass reinforced

* dependent on nominal size and operating pressure; ** dependent on nominal size and operating temperature

GEMÜ 354

3/2-way globe valve, pneumatically operated

Features

- Suitable for inert liquid and gaseous media
- Control medium: inert gases
- Materials of all media wetted parts can be selected to suit relevant applications
- With GEMÜ 354 valves control processes which normally require two separate valves can be combined, for example: mixing, separating, aerating and de-aerating
- Robust low maintenance plastic piston actuator
- Simple adaptation for use as a control valve
- Versions according to ATEX on request

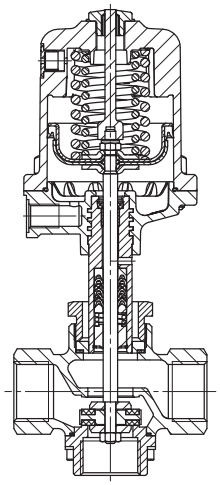

Actuator	Pneumatic
Nominal size	DN 15 to 50
Body configuration	Multi-port
Connection type	Threaded socket
Control function	Normally closed (NC)
Valve body material	Cast bronze
Media temperature *	-10 to 180 °C
Operating pressure **	0 to 16 bar
Seat seal	PTFE, PTFE glass reinforced

* dependent on nominal size and operating pressure; ** dependent on nominal size and operating temperature

GEMÜ 538

2/2-way globe valve, motorized

Features

- Open/Close function or control version
- Actuating speed and control parameters easily adjustable
- Optimised initialisation and valve control
- Parameterisation during operation
- Torque limitation
- Electronic limitation of opening and closing stroke
- Positioner and process controller are synchronised with each other
- Optional integrated emergency power supply module with selectable fail-safe condition
- Version with bellows (option)
- Available as a control or a shut-off valve

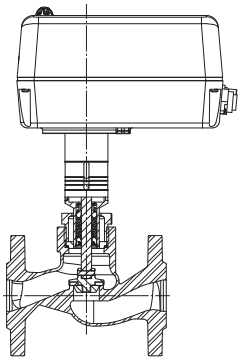

DN 25 to 50

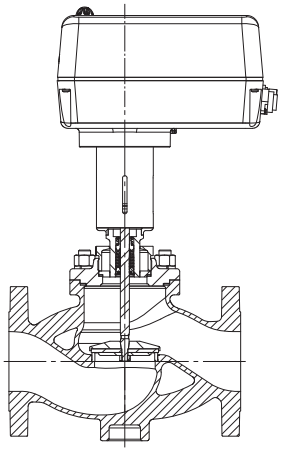

DN 65 to 100

Actuator	Motorized
Nominal size	DN 25 to 100
Body configuration	2/2-way body
Connection type	Flanges. Different standards and designs available
Voltage	12, 24 V DC 120, 230 V AC 50/60Hz
Valve body material	Cast stainless steel, SG iron
Media temperature *	-10 to 180 °C
Operating pressure **	0 to 25 bar
Seat seal	PTFE, PTFE glass reinforced, steel

* dependent on nominal size and operating pressure; ** dependent on nominal size and operating temperature

GEMÜ 539 eSyDrive

2/2-way globe valve, motorized

Features

- Linear or modified equal-percentage control characteristics
- Kv values from approx. 25 - 200 m³/h (depending on nominal size, valve seat and regulating cone design)
- High flow rates
- Force and speed are variably adjustable
- Extensive diagnostic facilities
- Operable via web interface eSy-Web
- Integral optical position indicator and LED high visibility display
- Standard gland packing suitable for vacuum up to 20 mbar (abs.)

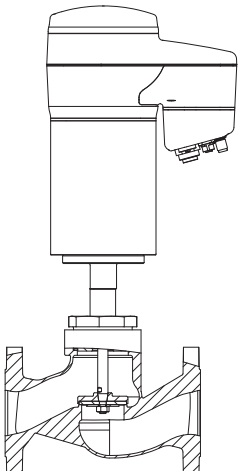

Actuator	Motorized
Nominal size	DN 40 to 100
Body configuration	2/2-way body
Connection type	Flanges. Different standards and designs available
Voltage	24 V DC
Valve body material	Investment casting, SG iron
Media temperature *	-10 to 180 °C
Operating pressure **	0 to 10 bar
Seat seal	PTFE, PTFE glass reinforced

* dependent on nominal size and operating pressure; ** dependent on nominal size and operating temperature

GEMÜ 342

3/2-way globe valve, motorized

Features

- Open/Close function or control version
- Actuating speed and control parameters easily adjustable
- Optimised initialisation and valve control
- Parameterisation during operation
- Torque limitation
- Electronic limitation of opening and closing stroke
- Positioner and process controller are synchronised with each other
- Optional integrated emergency power supply module with selectable fail-safe condition

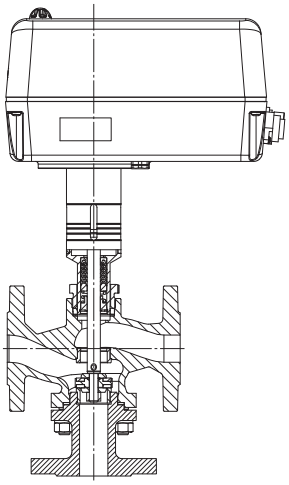

Actuator	Motorized
Nominal size	DN 25 to 80
Body configuration	Multi-port
Connection type	Flanges. Different standards and designs available
Voltage	12, 24 V DC 120, 230 V AC 50/60Hz
Valve body material	Cast iron
Media temperature *	-10 to 180 °C
Operating pressure **	0 to 16 bar
Seat seal	PTFE, PTFE glass reinforced

* dependent on nominal size and operating pressure; ** dependent on nominal size and operating temperature

GEMÜ 344

3/2-way globe valve, motorized

Features

- Open/Close function or control version
- Actuating speed and control parameters easily adjustable
- Optimised initialisation and valve control
- Parameterisation during operation
- Torque limitation
- Electronic limitation of opening and closing stroke
- Positioner and process controller are synchronised with each other
- Optional integrated emergency power supply module with selectable fail-safe condition

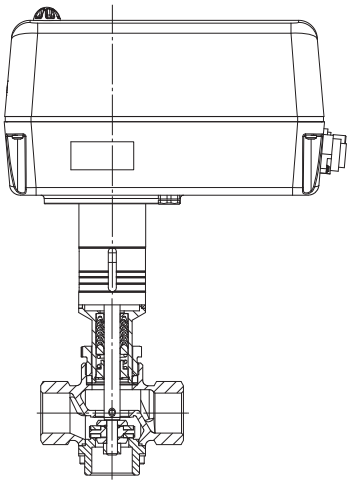

Actuator	Motorized
Nominal size	DN 25 to 50
Body configuration	Multi-port
Connection type	Threaded socket DIN ISO 228
Voltage	12, 24 V DC 120, 230 V AC 50/60Hz
Valve body material	Cast bronze
Media temperature *	-10 to 180 °C
Operating pressure **	0 to 16 bar
Seat seal	PTFE, PTFE glass reinforced

* dependent on nominal size and operating pressure; ** dependent on nominal size and operating temperature

GEMÜ 563

2/2-way control valve, motorized

Features

- Suitable for inert, corrosive, liquid and gaseous media
- The motor will withstand being stalled under full voltage
- Suitable for use as a control valve
- Integral optical position indicator
- Direct processing of 0/4 – 20 mA signals via the integrated controller
- Opening and closing behaviour is independent of the operating pressure
- Hermetic separation between medium and actuator

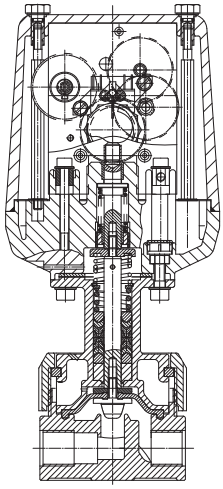

Actuator	Motorized
Nominal size	DN 3 to 15
Body configuration	2/2-way body
Connection type	Threaded connections.Different standards and designs available
Voltage	12, 24 V DC 120, 230 V AC 50/60Hz
Valve body material	PVC-U grey / regulating cone PEEK, PVDF / regulating cone PEEK
Media temperature *	0 to 80 °C
Operating pressure **	0 to 6 bar
Isolating diaphragm material	FPM, EPDM

* dependent on nominal size and operating pressure; ** dependent on nominal size and operating temperature

GEMÜ 566

2/2-way control valve, manual, pneumatic, motorized

Features

- Suitable for inert, corrosive, liquid and gaseous media
- Three operator types selectable (manual, pneumatic, motorized)
- Flow rates from 63 - 2,500 L/h
- Versions according to ATEX for manual and pneumatic operation on request
- An integrated control mechanism enables simplified operator replacement and subsequent automation
- Piping need not be drained when replacing the operator, as the spindle is sealed by an isolating diaphragm
- Linear and equal-percentage control characteristic options

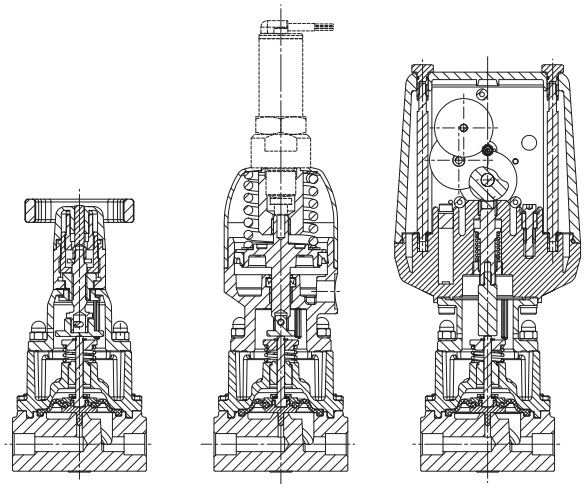

Operator	Manual, pneumatic, motorized
Nominal size	DN 8
Body configuration	2/2-way body
Connection type	Threaded socket
Control function	Manually operated, Normally closed (NC)
Voltage	12, 24 V DC 120, 230 V AC 50/60Hz
Valve body material	Investment casting
Media temperature *	0 to 80 °C
Operating pressure **	0 to 6 bar
Isolating diaphragm material	FPM, EPDM

* dependent on nominal size and operating pressure; ** dependent on nominal size and operating temperature

GEMÜ 567 BioStar control

2/2-way control valve, manually, pneumatically operated

Features

- Proven, reliable operator design (manual or pneumatic)
- Innovative sealing concept – seal between media chamber and actuator made of PTFE (derived from PD design)
- Easy to clean
- Control of small quantities
- Suitable for contact with food according to Regulation (EC) No. 1935/2004
- 3A version available upon request

PD design

- Unique sealing concept via plug diaphragm
- Hermetic separation of the operator from the media flow
- Significantly reduced deadleg in comparison to bellows
- Effective cleanability

PD Technology

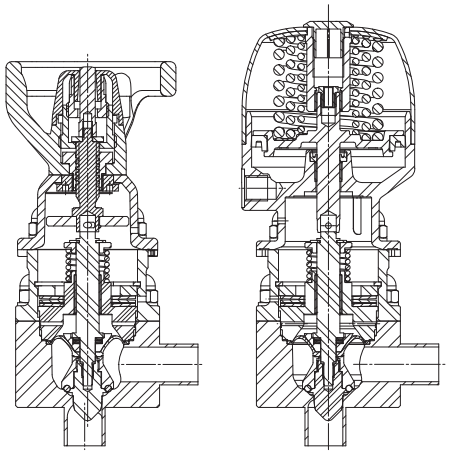

Operator	Manual	Pneumatic
Nominal size	DN 8 to 20	DN 8 to 20
Body configuration	Angle valve body with/without bypass	Angle valve body with/without bypass
Connection type	Butt weld spigots, clamp connections. Different standards and designs available	Butt weld spigots, clamp connections. Different standards and designs available
Control function	Manually operated	Normally closed (NC), Normally open (NO), Double acting (DA)
Valve body material	1.4435 (316L), block material	1.4435 (316L), block material
Media temperature *	0 to 160 °C	0 to 160 °C
Operating pressure **	0 to 10 bar	0 to 10 bar
Seal materials	PTFE (spindle seal), FKM (seat seal)	PTFE (spindle seal), FKM (seat seal)

* dependent on nominal size and operating pressure; ** dependent on nominal size and operating temperature

GEMÜ 553

2/2-way globe valve, modular design, pneumatically and/or manually operated

Features

- Suitable for inert, corrosive, liquid and gaseous media
- Faster operator replacement and free operator positioning due to fixing via union nut
- Space-saving modular design
- Simple sensor system integration and/or separation of media via universal module possible
- Distributing, mixing or collecting functions can be implemented
- Up to 10 single modules can be connected to each other

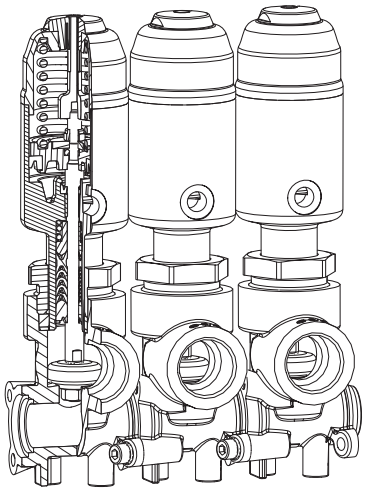

Operator	Pneumatic and/or manual
Nominal size	DN 15 to 20
Body configuration	2/2-way body, multi-port body
Connection type	Threaded socket DIN ISO 228
Control function	Normally closed (NC), Normally open (NO), Double acting (DA), manually operated
Valve body material	1.4408 cast stainless steel
Media temperature *	-10 to 180 °C
Operating pressure **	0 to 25 bar
Seat seal	PTFE

* dependent on nominal size and operating pressure; ** dependent on nominal size and operating temperature

GEMÜ 505

2/2-way angle seat globe valve, manually operated, for steam applications

Features

- Suitable for pure steam and gaseous media
- Inner surface of valve body ≤ Ra 0.4 µm, outer surface electropolished
- Free from non-ferrous metals
- Stainless steel bellows
- Welded valve plug
- Low maintenance, fixed seat plug (without threads)
- Fast operator replacement possible
- Standard integral optical position indicator
- Traceability of all media wetted parts
- Suitable for contact with food according to Regulation (EC) No. 1935/2004

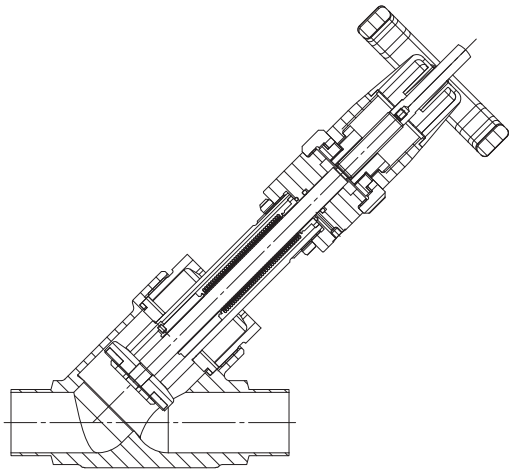

Operator	Manual
Nominal size	DN 8 to 80
Body configuration	2/2-way body
Connection type	Butt weld spigots, clamp connections. Different standards and designs available
Control function	Manually operated
Valve body material	Block material, investment casting
Media temperature *	-10 to 180 °C
Operating pressure **	0 to 10 bar
Seat seal	PTFE

* dependent on nominal size and operating pressure; ** dependent on nominal size and operating temperature

GEMÜ 507

2/2-way angle seat globe valve, manually operated

Features

- Good flow capability due to the angle seat design
- Optionally suitable for contact with food according to Regulation (EC) No. 1935/2004 (K-no. 1935)
- Standard gland packing suitable for vacuum up to 20 mbar (abs.)
- Available as a control or a shut-off valve
- Handwheel extension for use in insulated pipelines available as an option

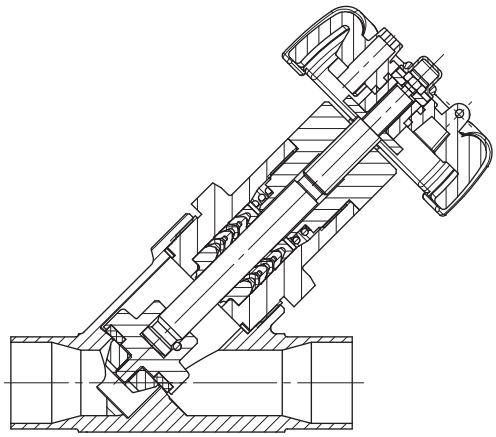

CRN

Operator	Manual
Nominal size	DN 6 to 80
Body configuration	2/2-way body, angle valve body E (only in 1.4408 cast stainless steel, DN 15 to 50)
Connection type	Butt weld spigots, threaded connections, flanges, clamp connections. Different standards and designs available
Control function	Manually operated, manually operated with handwheel clamp
Valve body material	Investment casting, cast stainless steel, forged body
Media temperature *	-10 to 180 °C
Operating pressure **	0 to 25 bar
Seat seal	PTFE, PTFE glass reinforced, PEEK

* dependent on nominal size and operating pressure; ** dependent on nominal size and operating temperature

Selection and use of globe valves

The optimum configuration of globe valves is essential for a high reliability level and long service life. Additionally, proper configuration reduces valve procurement and operating costs. Unfortunately, in practice sometimes too little time and effort are invested in finding the optimum configuration of a globe valve for control applications. In many cases, only the pipe diameter and connection type are used as the selection criteria. Because uncertainty may exist regarding the operating and control pressure ranges, safety margins chosen are often greater than necessary, resulting in selecting oversized actuators.

It is better to establish the Kv value and to select the proper actuator using pressure data which is as accurate as possible. The GEMÜ 550 range in particular offers six different actuator sizes for diameters DN 6 – 80. Thus the correct valve size can be chosen for the intended purpose.
The explanations presented below serve as additional help. The globe valves on the following pages are a selection of the most frequently requested valves and versions. We shall be happy to give you further information on request, or you can find some in the data sheets. Our sales and technical support staff will be happy to help you make the right choice.

Configuration of globe valves

When configuring globe valves the following factors have to be taken into account:

- Maximum valve operating pressure differential
- Required flow (Kv value)
- Type of working medium
- Operating and ambient temperatures (min. / max.)
- Flow direction, mounting position and size
- Valve seat and gland packing seal, dependent on process parameters and working media
- Required control function
- Operation
- Control pressure (min. / max.) for pneumatically operated valves
- Compressed air quality for pneumatically operated valves

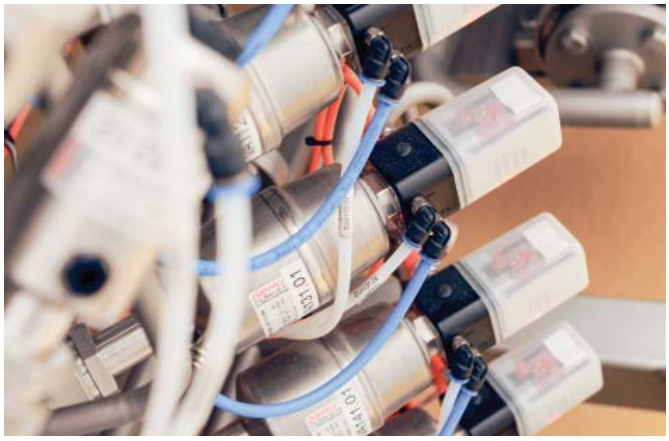

Maximum valve operating pressure differential
The operating pressure details shown in the datasheets refer to the maximum operating pressure differential applied at the valve and not to the applied pressure of the working medium. The resistance of the valve body to pressure must also be taken into account, considering the maximum pressure difference occurring relative to the surroundings. As a rule, the resistance to pressure of the body is higher than the maximum permissible operating pressure and is therefore not the determining value.

It is common to find wildly differing operating pressure information on different manufacturers' datasheets. This happens if the minimum control pressures are set higher or smaller seat diameters are used, which also results in lower Kv values, however. The various valve sizes and their connections are standardised, however, there are no clear specifications for seat diameter tolerances. This means, for example, that a DN 15 valve does not necessarily have an effective seat diameter of 15 mm. The effective seat diameter for this nominal size is often only 13 mm. On standard GEMÜ globe valves (with only a few exceptions) the given nominal size is the same as the effective seat diameter.

If vacuum is present in the process, this must also be taken into account. All GEMÜ valves are either designed for vacuum as standard or are available with an adjusted gland packing. The maximum permissible vacuum is 20 mbar, depending on the type of valve.

Selection and use of globe valves

Required flow (Kv value)
Calculating the Kv value is the correct way to configure a valve. This is shown on page 48 of this brochure. From the formulae it can be seen that not only the type of working medium is important, but also that the smallest difference in operating pressure at the valve is particularly crucial. The Kv values shown in the GEMÜ data sheets are the Kv values with a fully open valve (100% stroke).

As already mentioned above, selection only according to nominal and connection size may steer towards increased seat diameters and larger actuators on many valves, which in turn leads to higher purchase and operating costs.

Type of working medium
GEMÜ globe valves can be used for clean liquid and gaseous media and for steam. The tightness of the valve at its seat and to the outside depends among other things on the chemical composition of the working medium. The standard versions are designed for liquid media and are normally fitted with a PTFE seal at the seat. The elastomer seals from GEMÜ are well suited to gaseous media.

We have globe valves with stainless steel bellows for corrosive or gaseous media. Because of the high switching frequency, bellows sealings are often used for control applications.
Globe valves are only of limited use for media containing solids. Diaphragm valves are often the first choice for particulate media.

Operating and ambient temperatures (min. / max.)
The maximum permissible ambient and media temperatures given in the data sheets show the maximum permissible loads for the valve in operation. This means that the maximum ambient temperature and the maximum temperature of the working media may be reached at the same time. Special gland packings and seals for an operating temperature of 300 °C are available for globe valves.

If different temperature combinations are necessary, GEMÜ Support will help you.

Flow direction, installation position and size
The preferred flow direction for globe valves is with the media flow under the seat. This helps to avoid water hammer which could damage the valve or even the whole plant. If it is required to install the valve with the operating pressure flow over the seat, water hammer prevention measures must be taken, especially when using liquids. Flow over the seat may lead to increased wear and possibly premature valve failure.

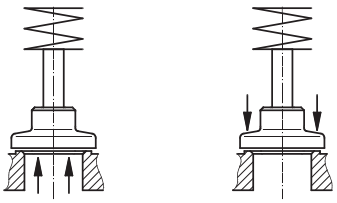

Flow
under the seat

Flow
over the seat

Although the incompressibility of the medium is not as critical with gases and steam, here, too, the preferred flow direction is under the seat.

The valve's installation position is optional. GEMÜ recommends a vertically upright installation position. If any positioners, position indicators or displays are retrofitted good visibility and improved access remain assured.

Angle seat globe valves are often preferred because of their smaller installation space requirements in relation to the Kv value achieved. When using flange and clamp connections their reduced lengths may however lead to interference with the actuators. For this reason standard globe valves are often used for such connections. There is no functional difference between standard globe valves and angle seat globe valves.

Requirements for compact plant designs
Our valve bodies are available in an angled design for installing globe valves in particularly narrow and compact plant. Due to a flexible valve body design, plant and machinery can be planned in a layout that is compact and weight-saving.

GEMÜ 550
with GEMÜ 4242
combi switchbox

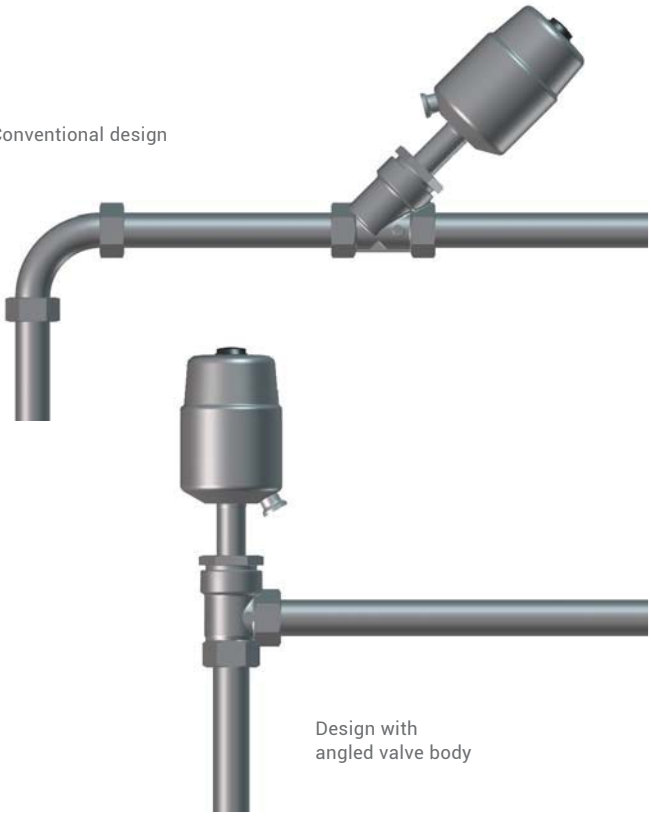

Conventional design

Design with
angled valve body

Selection and use of globe valves

Valve seat and gland packing seal
The standard PTFE seat seals and PTFE/FPM packings are adequate for most applications. At higher operating temperatures, steel-steel seats and special seal materials for the valve spindle or stainless steel bellows are used. Special applications which require NBR seals or other special versions are available on request.

The structure of GEMÜ gland packings is based on many years of experience in the most varied of areas of application and is arranged in such a way that the individual elements are always under the ideal tension due to the pre-tension spring, even at fast actuating speed. That guarantees optimal and long-lasting sealing.

Required control function
GEMÜ on/off valves with pneumatic actuator are available as standard with control function 1 (normally closed, NC), control function 2 (normally open, NO) and control function 3 (double acting, DA). Should you need special versions, please contact our technical advisers.

In addition to their simple on/off functions GEMÜ has system solutions for all globe valves with electro-pneumatic and electric positioners/controllers for control tasks.

Actuator
control function 1
Normally closed (NC)

Actuator
control function 2
Normally open (NO)

Actuator
control function 3
Double acting (DA)

As well as the requirements based on the application, the use of control valves can achieve a longer service life for plant components. In many cases the continual adjustments of control valves minimise plant components wear compared to purely on/off versions.

Operation
GEMÜ offers a wide range of manual, pneumatic and motorized operators.
Pneumatically operated valves are still preferred for automated applications because of lower procurement costs. However, the operating costs of motorized actuators are usually lower. On the "Total cost-of-ownership" principle not only are procurement costs of the valve added into the economic calculation, but also operating costs plus the cost of compressed air generation and distribution for the unit's entire service life. The result of this argument weighs favourably towards electric plant concepts. This is especially true when taking into account planning and building new plants far removed from an existing air supply, or if compressed air distribution becomes unwieldy due to size and distance.

Control pressure for pneumatically operated valves
The control pressure depends on the operating pressure, installation (flow direction over or under the seat), effective valve seat and actuator piston diameters, control function, spring forces and friction forces within the valve actuator. The maximum control pressure is normally limited to keep wear within acceptable limits. The minimum control pressure depends on the specific operating pressure and the valve configuration. In practice, lower or higher control pressures are possible which depends on the general application conditions.

Compressed air quality for pneumatically operated valves
The GEMÜ standard actuators are designed for air as normally available from professionally installed and maintained compressed air supply units. Sometimes the permissible air quality parameters in terms of particle load and humidity are considerably exceeded. A higher dirt particle load leads to premature piston seal wear and consequently to a shorter service life. High humidity also leads to corrosion damage. For special applications the actuators can be fitted with stainless steel springs.

Selection of globe valves
for control tasks

Control valves have a direct effect on the flow (indirectly on pressure, temperature, concentration etc.). The effect depends on the valve opening (defined, approved cross-section). In globe valves the appropriate flow characteristics are achieved by means of a defined seat contour (e.g. regulating cone). A suitable valve, the right regulating cone and a suitable actuator are necessary for optimum functionality.

Positioners GEMÜ 1434 µPos, GEMÜ 1435 ePos and GEMÜ 1436 cPos are used with actuators for electro-pneumatic solutions. The stroke or position of the regulating cone is changed by regulating the control pressure. In motorized solutions, the motor controls this position directly.

GEMÜ globe valves for control tasks are optimised particularly in the following areas:

- Long stroke distance at simultaneously low cross-sectional increase at the valve seat
- Jolt-free actuation
- Long life with regard to the actuating frequency

By using regulating needles, regulating cones and regulating cages they can be optimally designed for the flow range to be controlled and the different characteristics required. They are used preferably for clean media, especially steam and gases. Diaphragm valves are to be preferred for sterile applications or media contaminated by particles. Usually only ball valves can be considered at high pressures, for large nominal sizes gate valves and butterfly valves are preferred.

The most common problems which can occur due to an inadequate design of globe valves for positioning and control tasks are listed below.

- Poor control results due to the wrong valve design
- Premature wear with regard to cavitation and unacceptable noise

Poor control results due to the wrong valve design
Due to absence of or incorrect calculation of the Kv values, often only a small part of the possible control range is exploited or the minimum or maximum flow is not reached.

If only a small part of the possible control range of the valve is exploited, the slightest changes in the set value usually lead to unacceptably large fluctuations in the valve opening, the flow and therefore the influenced process parameters. The setting of the control parameters on the controller or the motorized actuator is very difficult as a result and often impossible because the valve stroke can no longer be set with sufficient precision or the system-related hysteresis is too great. The static and dynamic control behaviour is generally more inaccurate. In positioning valves in an open control circuit, the fluctuations of the flow values increase at the same set value specification.

Valves with too big a nominal size are often chosen. Because of the mechanical tolerances of the valve seat and the regulating cone, it is no longer possible to control the flow in the lowest part of the control range. A reproducible control of the flow without additional technical effort is only possible from about 5-10% of the stroke. If the valve selected is too big, the smallest reproducible adjustable opening may be bigger than the required minimum flow. For this reason valves with a reduced seat diameter are often required. The standard regulating cones shown on page 62 of the brochure represent the most popular ranges. Valves with a reduced valve seat and narrower tolerances also offered by GEMÜ are listed on page 50 of this brochure.

The positioning ratio of the valve cannot be assessed without analysing the required Kv value range. The positioning ratio is understood as the maximum opening required in relation to the minimum opening. GEMÜ recommends a positioning ratio of 50:1. Greater positioning ratios are possible (up to 100:1) but require additional measures in the valve mechanics and optimum installation conditions.

Selection of globe valves
for control tasks

Premature wear with regard to cavitation and unacceptable noise
Problems may occur in the selection of valves and control fittings due to cavitation. Damage to the interior valve fitting, the valve body or the pipe is possible. In addition, loud noise of a high frequency may occur.

Cavitation is the formation of steam bubbles in liquids. It occurs when the local static pressure in a liquid drops below the critical value. This condition can occur, for example, at the constriction between the valve seat and the regulating cone. If the pressure rises again after the constriction, the steam bubbles collapse again, virtually imploding. This creates liquid jets of a high speed which can cause damage when they hit the interior valve fitting or the pipe. Molecules are ejected from the surfaces of the adjacent components. Cavitation causes premature wear and failure of the components.

In order to prevent cavitation, the exit speed of the liquid at the valve seat should not be too high. The maximum flow speed depends on the medium and must therefore be assessed individually.

It is recommended to have the control valve designed by GEMÜ beforehand. During this stage, properties that may occur such as cavitation or excessive flow velocity are determined and specific solution proposals can be offered to minimise or prevent them.

In addition to the correct valve design, the course of the pipe before and after the valve also influences the flow. No bent pipe sections should be installed directly before and after the valve. The free outlet distance should be at least 10 times the length of the valve diameter. As large a pipe nominal size as possible should be used for the outlet.

The control valve can be designed on the basis of process conditions with the aid of CONVAL design software. GEMÜ control valves can also be designed using the GEMÜ in-house design software "ValveSizer", which is based on CONVAL.

GEMÜ 554
with GEMÜ 1434 µPos
positioner

The optimal controller
for trouble-free process control

Notes for selecting positioners
The optimum function of a control system is not solely achieved by the selection of the positioner. All system components must be optimally adapted to each other.

If not achieved, poor positioning and control results will be observed. The greater the demands with regard to control accuracy, positioning ratio, cavitation and optimum operating and procurement costs, the more careful a selection must be made.

Electro-pneumatic positioners
Electro-pneumatic positioners are most frequently used as positioners or as combined position and process controllers for control functions. Because of the more favourable procurements costs in comparison with motorized actuators, electro-pneumatic positioners are used wherever control air is already available. The combination of electro-pneumatic positioners and compressed air controlled valves is basically determined by the control task.

GEMÜ has developed a complete range of positioners for performing various different control tasks. The electro-pneumatic positioner range comprises the GEMÜ 1434 µPos, GEMÜ 1435 ePos and GEMÜ 1436 cPos.

- GEMÜ 1434 µPos - simple, low cost positioner for single acting linear actuators without display and setting keys
- GEMÜ 1435 ePos and GEMÜ 1436 cPos are positioners for use in demanding applications.
  They can be adapted individually to the control task with the front keypad and display
- GEMÜ 1436 cPos as a process controller with integrated positioner

In addition, the relation between the air output of the positioner, required control pressure and the size of the valve actuator still plays a role. This relation determines the valve's operating time. Depending on the control task and range of the valve, shorter operating times and therefore higher flow volumes through the control valves in the positioners are necessary. The GEMÜ 1434 µPos positioner was specially developed for small linear actuators.

Normally the pilot pressure for a globe valve is controlled in a positioner and a certain valve opening set as a result.

The GEMÜ 1436 cPos additionally offers an optional process control circuit for controlling the process. It can be used as a local process controller and thus relieves the load on the central control system.

Independently of the correct valve design, the valve must be positioned with the positioner and the necessary sensors at the "right place" in the pipe system. Only then is an optimum function guaranteed. With electro-pneumatic positioners, for example, generally pressure and flow sensors should always be installed before the valve, temperature and pH value sensors after the valve.

Electrical positioners and control actuators
GEMÜ offers several valve types with a motorized actuator. These actuators are an optimum alternative in sterile environments or offer reduced "Total Costs of Ownership". The procurement costs for a motorized valve are a little higher but there may be a cost advantage in terms of total life cycle costs. The actuators are comparable with the electro-pneumatic positioners in their functionality.
They are available with both integrated positioner and combined position and process controller.

GEMÜ 1436 cPos

Positioners and process controllers

Positioners and process controllers - Overview

Function / Features		GEMÜ 1434 µPos	GEMÜ 1435 ePos	GEMÜ 1436 cPos	GEMÜ 1436 cPos eco
Controller type	Positioner	●	●	●	●
	Process controller			●	
Operation	Local display / keypad		●	●	
	Status display	●	●	●	●
	Web browser user			●	
	Fieldbus option (Profibus DP, Device Net)			●	
Body	Plastic	●		●	●
	Aluminium		●		
Functions	Automatic initialisation (speed-AP)	●	●	●	●
	Alarm / error outputs		●	●	
	Min/max positions adjustable		●	●	
Mounting	Direct mounting to linear actuators	●	●	●	●
	Remote mounting to linear actuators	●	●	●	●
	Direct mounting to quarter turn actuators		●	●	●
	Remote mounting to quarter turn actuators		●	●	●
Control function of valve actuator	Control function 1, normally closed (NC)	●	●	●	●
	Control function 2, normally open (NO)	●	●	●	●
	Control function 3, double acting (DA)		●	●	
Air output		15 Nl/min.	50 Nl/min. 90 Nl/min.	150 Nl/min. 200 Nl/min. 300 Nl/min.	150 Nl/min. 200 Nl/min.

GEMÜ 1434 µPos

Electro-pneumatic positioner

Construction
The GEMÜ 1434 µPos digital positioner detects the valve position via its longlife travel sensor. It was specially designed for small linear valve actuators and has a light, plastic and aluminium housing (optional stainless steel).

Features

- Automatic initialisation by 24 V DC signal
- Automatically optimises the valve control during initialisation
- No air consumption when idle
- Suitable for single acting linear actuators
- Push-in pneumatic air connectors
- Compact construction, small dimensions
- Remote mounting of positioner and travel sensor is possible
- Integrated potentiometer
- Low investment costs
- Low operating costs
- Fast commissioning, no need to open the housing
- Simple operation
- Easy mounting to GEMÜ valves and other makes
- Simple electrical and pneumatic connection
- *Speed*-AP function

GEMÜ 550 with
GEMÜ 1434 µPos

GEMÜ 534 with
GEMÜ 1434 µPos

GEMÜ 1435 ePos

Electro-pneumatic positioner

The GEMÜ 1435 ePos digital electropneumatic positioner detects the valve position via its external travel sensor. It has a robust metal housing with protected operating buttons and an easy to read LC display with background light. The operating times can be set by integrated throttles.

Features

- Simple, self-explanatory menu
- Automatic initialisation function
- Automatically optimises the valve control during initialisation
- Safety function in case of compressed air and power supply failure
- No air consumption when idle
- Adjustable digital outputs for limit values
- Adjustable alarm functions
- Operation by fascia buttons
- Suitable for quarter turn or linear actuators
- Can be used for single or double acting actuators
- Remote mounting of positioner and travel sensor is possible
- Low operating costs, no air consumption when idle
- High air output for larger actuators
- Fast commissioning
- Simple operation
- Easy mounting to the valve
- Simple electrical connection by detachable terminals
- ***Speed***-AP function
- Integrated heating element (optional) for extended temperature range

GEMÜ 530 with GEMÜ 1435 ePos

GEMÜ 550 with GEMÜ 1435 ePos

GEMÜ 1436 cPos

Electro-pneumatic positioner with optional integrated process controller

The GEMÜ 1436 cPos digital electro-pneumatic positioner with an integrated process controller is for the control of liquids, gases and steam.

When using the optional process controller the signals from a process sensor (e.g. flow, level, pressure, temperature) are detected and the media adjusted according to the specified set value. The membrane keypad and the backlit display are arranged at the front. Pneumatic and electrical connections are at the rear. Integrated pneumatic throttles allow regulation of the control air to adapt the controller to different valve actuators and actuating speeds.

Features

- PID process control possible
- Remote control
- Diagnostics, alarms, monitoring
- Integrated Web browser capability
- Parameter sets can be saved and reloaded
- User levels (access authorisation)
- Fieldbus: Profibus DP, Device Net
- Simple, self-explanatory menu
- Automatically optimises the valve control during automatic initialisation
- Safety function in case of compressed air and power supply failure
- Optional digital inputs
- Freely configurable relay outputs
- Parameterisation during operation
- Remote mounting of positioner and travel sensor is possible
- Low operating costs, no air consumption when idle
- High air output for larger actuators
- Fast commissioning
- Simple operation
- No air consumption when idle
- Easy mounting to the valve
- ***Speed***-AP function
- ***e.***sy-com interface

GEMÜ 566 with
GEMÜ 1436 cPos

GEMÜ 536 with
GEMÜ 1436 cPos

Flow restrictors for globe valves

A simple On/Off control is not sufficient to exert a flexible influence on the volumetric flow in a pipe. The volumetric flow must be set precisely to a range adapted to the control task. For this purpose, the valves are equipped with appropriate flow restrictors. In order to achieve the desired control characteristic they can be designed and manufactured to suit the application.

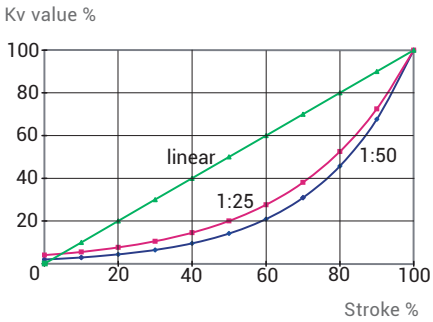

Typical control characteristics

With increasing opening of the valve, the flow restrictor changes the annular gap at the valve seat providing a defined control characteristic. A suitable valve, the right flow restrictor and a suitable actuator are necessary for optimum functionality.

The most frequently used control characteristics are linear and equal-percentage 1:25 and 1:50. Linear means that the flow increases linearly with the opening stroke of the valve. The flow is 50% at the 50% open valve position. This provides good valve control over the whole stroke range.

The equal percentage control characteristics have the character of an exponential function. In the lower range of approx. 10% to 60% opening stroke, these valves can be very finely regulated depending on the valve stroke.

Flow restrictors can be used for both angle seat globe valves and straight seat globe valves. Straight seat globe valves are preferred for precise control, as the flow force in this valve principle is mainly axial and therefore mechanically favourable. GEMÜ uses stainless steel as standard for the flow restrictors. Special materials are available on request.

Seals are integrated for sealing the valves.

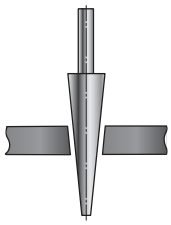

Regulating needle

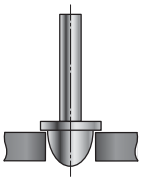

Regulating cone

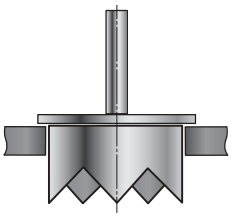

Regulating cage

Depending on the type of globe valve and the nominal size, flow restrictors may have widely different geometries. Regulating needles are used for very small nominal sizes and high pressures because they can control with high precision. At large nominal sizes, modified regulating cones or regulating cages are preferred for weight reasons.

Control valves
Overview

Products

GEMÜ 514

GEMÜ 550

GEMÜ 554

GEMÜ 530

GEMÜ 532

GEMÜ 534

Composition

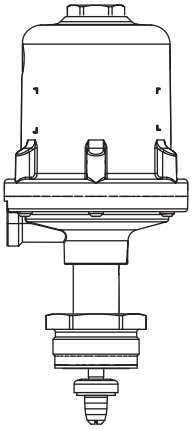

Actuator with regulating cone

+

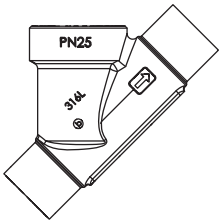

Valve body
(with or without reduction)

=

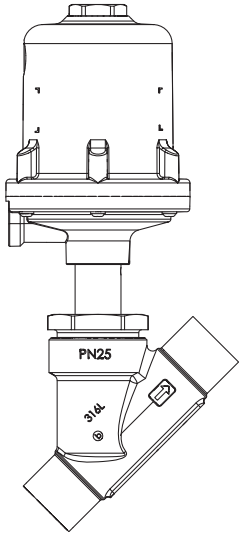

Control valve

R-Number*	Control valve	Example
RSxxx**	Standard control valves***	550 20D 137 512G1RS112
RAxxx, RBxxx,...	Standard control valve with reduced valve seat	550 20D 137 512G1RE405
Rxxxx	Control valve with or without reduced valve seat	550 20D 137 512G1R1368

* R-Number = regulating cone number
** x = a number from 0-9
*** Standard control valves are only available in the designs listed in the datasheet

Actuator replacement

The following information must be noted if an actuator is to be replaced:

- The nominal size of the actuator must correspond with the nominal size of the valve body
- The actuators of the GEMÜ 514, GEMÜ 550 and GEMÜ 554 angle seat globe valves can be assembled on the same angle seat globe valve body. Equally, the actuators of the GEMÜ 530, GEMÜ 532 and GEMÜ 534 globe valves can be assembled on the same globe valve body
- In the case of valves with a reduced valve seat, the correct combination of valve body and actuator must be ensured. For this purpose, the actuator product label must be compared with the valve body marking

Actuator product label	Valve body marking	Valve seat diameter
RAxxx	R002	2 mm
RBxxx	R004	4 mm
RCxxx	R006	6 mm
RDxxx	R008	8 mm
RExxx	R010	10 mm
RFxxx	R012	12 mm
RGxxx	R015	15mm
RHxxx	R020	20 mm
RJxxx	R025	25 mm
RKxxx	R032	32 mm
RMxxx	R040	40 mm

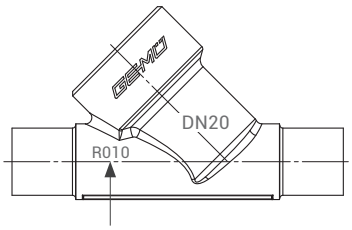

Valve body marking
2/2-way body
Example: R010

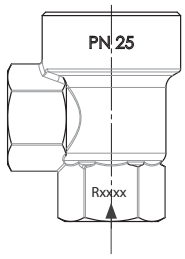

Valve body marking:
Angle valve body

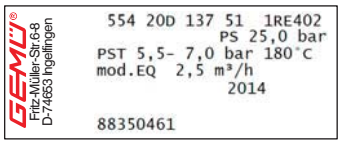

Actuator product label,
example: GEMÜ 554

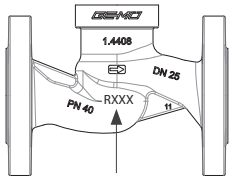

Valve body marking
2/2-way body

Example

The GEMÜ 554 is to be converted to the GEMÜ 550. The valve body should be retained.

- The valve type, nominal size and R-Number of the valve to be converted must be known:

Valve to be converted	Kv value	Valve seat diameter
554 20D 1 37 5 1 1 **RE402**	1.6 m³/h, mod. EQ	10 mm

- The data from the valve to be converted enables the Kv value to be determined using the GEMÜ 554 control valve data-sheet
- The GEMÜ 550 control valve datasheet can now be used to reselect the required R-Number.
  Note: In the same way, with a previous R-Number RExxx, only one actuator can subsequently be used for a reduced seat
- The following actuator has been selected: 9550 20Z 5 12 G 1 RE405.
- Convert the valve to the GEMÜ 550 by assembling the GEMÜ 9550 actuator:

Converted control valve	Kv value	Valve seat diameter
550 20D 1 37 5 1 1 **RE405**	1.6 m³/h, mod. EQ	10 mm

Overview of R-Numbers

Regulating cone codes for valve bodies with a reduced seat

Angle seat globe valves		GEMÜ 514			GEMÜ 550			GEMÜ 554		
Nominal size	Valve body	linear	equal-percentage (mod.)	Kv value (m³/h)	linear	equal-percentage (mod.)	Kv value (m³/h)	linear	equal-percentage (mod.)	Kv value (m³/h)
15	R002	-	RA406	0.16	-	RA404	0.16	-	RA402	0.16
	R004	RB207	-	0.16	RB204	-	0.16	RB201	-	0.16
		RB208	RB405	0.25	RB205	RB403	0.25	RB202	RB401	0.25
		RB209	RB406	0.4	RB206	RB404	0.4	RB203	RB402	0.4
		RC205	RC405	0.63	RC203	RC403	0.63	RC201	RC401	0.63
	R006	RC206	RC406	1.00	RC204	RC404	1.00	RC202	RC402	1.00
	R008	RD205	RD405	1.60	RD203	RB403	1.60	RD201	RD401	1.60
	R010	RE207	RE407	2.5	RE204	RE404	2.5	RE201	RE401	2.5
20	R008	RD206	RD406	1.60	RD204	RD404	1.60	RD202	RD402	1.60
	R010	RE208	RE408	2.50	RE205	RE405	2.50	RE202	RE402	2.50
	R012	RF207	RF407	4.00	RF204	RF404	4.00	RF201	RF401	4.00
	R015	RG209	RG409	6.30	RG205	RG405	6.30	RG201	RG401	6.30
25	R010	RE209	RE409	2.50	RE206	RE406	2.50	RE203	RE403	2.50
	R012	RF208	RE408	4.00	RF205	RF405	4.00	RF202	RF402	4.00
	R015	RG210	RG410	6.30	RG206	RG406	6.30	RG202	RG402	6.30
	R020	RH209	RH409	10.00	RH205	RH405	10.00	RH201	RH401	10.00
32	R012	RF209	RF409	4.00	RF206	RF406	4.00	RF203	RF403	4.00
	R015	RG211	RG411	6.30	RG207	RG407	6.30	RG203	RG403	6.30
	R020	RH210	RH410	10.00	RH206	RH406	10.00	RH202	RG402	10.00
	R025	RJ207	RJ407	16.00	RJ204	RJ404	16.00	RJ201	RJ401	16.00
40	R015	RG212	RG212	6.30	RG208	RG408	6.30	RG204	RG404	6.30
	R020	RH211	RH211	10.00	RH207	RH407	10.00	RH203	RH403	10.00
	R025	RJ208	RJ208	16.00	RK205	RJ405	16.00	RJ202	RJ402	16.00
	R032	RK205	RK205	25.00	RK203	RK403	25.00	RK201	RK401	25.00
50	R020	RH212	RH212	10.00	RH208	RH408	10.00	RH204	RH404	10.00
	R025	RJ209	RJ209	16.00	RJ206	RJ406	16.00	RJ203	RJ403	16.00
	R032	RK206	RK204	25.00	RK404	RK202	25.00	RK402	25.00	25.00
	R040	RM203	RM202	40.00	RM402	RM201	40.00	RM401	40.00	40.00

Please observe the data in the datasheet.

Important note:
The identifiers RAxxx, RBxxx and RCxxx denote a permanently joined subassembly consisting of regulating cone and spindle.
A subsequent replacement of the regulating cone is therefore not possible.

Overview of R-Numbers

Regulating cone codes for valve bodies with a reduced seat

Globe valves		GEMÜ 530			GEMÜ 532			GEMÜ 534		
Nominal size	Valve body	linear	equal-percentage (mod.)	Kv value (m³/h)	linear	equal-percentage (mod.)	Kv value (m³/h)	linear	equal-percentage (mod.)	Kv value (m³/h)
15	R002	-	RA304	0.16	-	RA306	0.16	-	RA302	0.16
	R004	RB104	-	0.16	RB107	-	0.16	RB101	-	0.16
		RB105	RB303	0.25	RB108	RB305	0.25	RB102	RB302	0.25
		RB106	RB304	0.40	RB109	RB306	0.40	RB103	RB301	0.40
	R006	RC103	RC303	0.63	RC105	RC305	0.63	RC101	RC301	0.63
		RC104	RC304	1.00	RC106	RC306	1.00	RC102	RC302	1.00
	R008	RD103	RD303	1.60	RD105	RD305	1.60	RD101	RD301	1.60
	R010	RE104	RE304	2.50	RE107	RE307	2.50	RE101	RE301	2.50
20	R008	RD104	RD304	1.60	RD106	RD306	1.60	RD102	RD302	1.60
	R010	RE105	RE305	2.50	RE108	RE308	2.50	RE102	RE302	2.50
	R012	RF104	RF304	4.00	RF107	RF307	4.00	RF101	RF301	4.00
25	R010	RE106	RE306	2.50	RE109	RE309	2.50	RE103	RE303	2.50
	R012	RF105	RF305	4.00	RF108	RF308	4.00	RF102	RF303	4.00
	R015	RG104	RG304	6.30	RG107	RG307	6.30	RG101	RG301	6.30
32	R012	RF106	RF306	4.00	RF109	RF309	4.00	RF103	RF302	4.00
	R015	RG105	RG305	6.30	RG108	RG308	6.30	RG102	RG302	6.30
	R020	RH104	RG304	10.00	RH107	RH307	10.00	RH102	RH301	10.00
40	R015	RG106	RG306	6.30	RG109	RG309	6.30	RH103	RG303	6.30
	R020	RH105	RH305	10.00	RH108	RH308	10.00	RH101	RH302	10.00
	R025	RJ103	RJ303	16.00	RJ105	RJ305	16.00	RJ101	RJ302	16.00
50	R020	RH106	RH306	10.00	RH109	RH309	10.00	RH103	RH303	10.00
	R025	RJ104	RJ304	16.00	RJ106	RJ306	16.00	RJ102	RJ301	16.00
	R032	RK102	RK302	25.00	RK103	RK303	25.00	RK101	RK301	25.00

Please observe the data in the datasheet.

Important note:
The identifiers RAxxx, RBxxx and RCxxx denote a permanently joined subassembly consisting of regulating cone and spindle.
A subsequent replacement of the regulating cone is therefore not possible.

Combi switchboxes and electrical position indicators

for pneumatically operated linear valves

Our devices detect the valve stroke in any installation position without play and are tension-free. The sensor base of the GEMÜ 1234, 1235 and 4242 series is positively connected to the valve spindle by means of a preloaded spring so that possible tangential forces of the valve actuator do not negatively affect the position indicator. The position indicators can be quickly and easily assembled and are safe and uncomplicated to handle.

	Combi switchbox	Electrical position indicators									
Device type	**4242**	**1215**	**1230**	**1231**	**1232**	**1201**	**1211**	**1214**	**1234**	**1235/ 1236**	**1242**
Valve stroke (in mm)	2 - 75		2 - 20	2 - 20	2 - 20	2 - 70	2 - 70	2 - 70	1 - 10	2 - 30 4 - 50 5 - 75	2 - 46
Electrical connection	M12	[1]	[1]	[2]	[1]	[2]	[2]	[1]	M12	M12	M12
Programmable	●								●	●	●
With integrated pilot valve	●										
Ex design		●[3]		●			●				
NEC 500 version	●										●
Fieldbus interface	●								●		●
Mechanically adjustable switches			●	●	●	●	●	●			
Mechanically adjustable (microswitches)			●			●					
UL version	●		●								●
SIL version										●	
Optical position indicator (LEDs)	●		●		●			●	●	●	●
Optical position indicator (mechanical)	●[4]	●									
Feedback (OPEN and CLOSED)	●		●	●	●	●	●	●	●	●	●
Feedback (OPEN)		●									

[1] cable gland, M12 (optional)
[2] cable gland
[3] not with optional M12 plug
[4] for size 2 only

Kv value

Valves always exert an influence on volumetric flow. Therefore the correct design of the valve with regard to its Kv value is extremely important. The flow for the control task should always be in the optimum control range of the valve. If the flow is outside the optimum range or too close to the lower Kv value, another valve must be selected. However, it may be useful with a very wide control range, to install a second control valve so that the critical control range is optimally covered.

The Kv value is the flow coefficient of a valve. It is possible to determine the Kv value of a valve in any opening position. The Kvs value indicates the maximum Kv value, this is usually achieved with a fully open valve. The Cv value is the flow coefficient in US-Gal/min. Conversion between these is possible with the formula below.

1 Cv = 1.17 x Kv	1 Kv = 0.86 x Cv

Unit of measure Kv value
If the Kv value is given without a unit of measure, i.e. only a number, the unit of m³/h is assumed. If another variable is to be defined, the appropriate unit of measure must be after the number.

Determination of Kv value
The Kv values should be determined as far as possible through a measurement at 1 bar pressure loss using water at a temperature of 5 to 40 °C, and are to be specified in m³/h.
During the measurement, care must be taken to ensure that the valve and also the connecting pipelines are completely filled with water. If the determination is not possible at a pressure loss of 1 bar using water, measurements are also permissible under different conditions.
In this case, however, the pressure loss should be between 0.35 bar and 1.0 bar, in order that the validity of the following conversion formula is guaranteed

Basis for calculation for Kv values
Formulae are used which take into account all the parameters and physical variables deviating from the test. Since liquids, gases and steam are subject to different laws, different formulae are also used. The original calculation formulae are very extensive, therefore the general "simplified" formulae are used in most cases. Here it is important that they cannot be fully abbreviated and the unit used respectively for the value Q or the Kv value is identical.

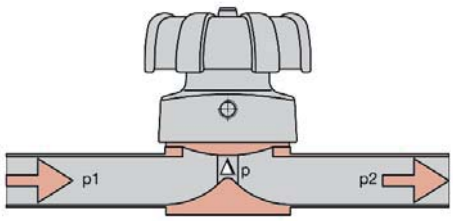

Pressure loss	Kv	for water	for liquid	for steam	for gases
$\Delta p < \frac{p_1}{2}$ $\left(p_2 > \frac{p_1}{2}\right)$	Kv	$= \frac{Q}{\sqrt{\Delta p}}$	$= \frac{Q}{31.6} \cdot \sqrt{\frac{p_1}{\Delta p}}$	$= \frac{\dot{M}}{31.6} \cdot \sqrt{\frac{v'}{\Delta p}}$	$= \frac{Q_n}{514} \cdot \sqrt{\frac{\rho_n \cdot T_1}{\Delta p \cdot p_2}}$
$\Delta p > \frac{p_1}{2}$ $\left(p_2 < \frac{p_1}{2}\right)$	Kv	$= \frac{Q}{\sqrt{\Delta p}}$	$= \frac{Q}{31.6} \cdot \sqrt{\frac{p_1}{\Delta p}}$	$= \frac{\dot{M}}{31.6} \cdot \sqrt{\frac{2 \cdot v''}{p_1}}$	$= \frac{Q_n}{257 \cdot p_1} \cdot \sqrt{\rho_n \cdot T_1}$

Kv	m³/h	flow coefficient of the valve	ρ_1	kg/m³	density of the material in the operating state T_1 and p_2
Q	m³/h	flow rate	ρn	kg/m³	density of the gas at 0 °C and 1014 mbar
Qn	m³/h	volumetric flow of the gas at 0 °C and 1014 mbar	v'	m³/kg	spec. steam volume at T_1 and p_2
M_{max}	kg/h	(M_{min}) - maximum (minimum) weight flow to be controlled	v"	m³/kg	spec. steam volume at $\frac{p_1}{2}$ and T_1
p_1	bar	absolute pressure before the valve (at Q)	$\dot{M}$	kg/h	mass flow
p_2	bar	absolute pressure after the valve (at Q)	T_1	K	medium temperature
Δp	bar	(Δp) - pressure differential p_1 - p_2 at Q			

Basic terms of control technology

According to DIN 19226, control or controlling is a process in which the variable to be controlled is continuously measured, compared with the command variable and influenced in the sense of adjustment to the command variable. Typical for the control is the closed action circuit in which the controlled variable influences itself continuously within the control circuit.
The right design of the control circuit is necessary for good, reliable functionality. The valve and the control or regulating device must be closely adapted to each other.

The control is characterised by:

- Type of control/regulation
- Accuracy of the control
- Controlled system and its influential factors
- Controller type (2-point, 3-point, P, PI, PD, PID etc.)
- Control task (pressure, temperature, filling level, flow, pH value etc.)
- Control range of the valve (Kv value)

Electro-pneumatic process control

Positioners and process controllers exist as single and "2 in 1" devices. If the travel is measured mechanically, the positioner must be mounted directly on the valve. Using an electronic travel detector, the positioner can be positioned remotely from the actuator.

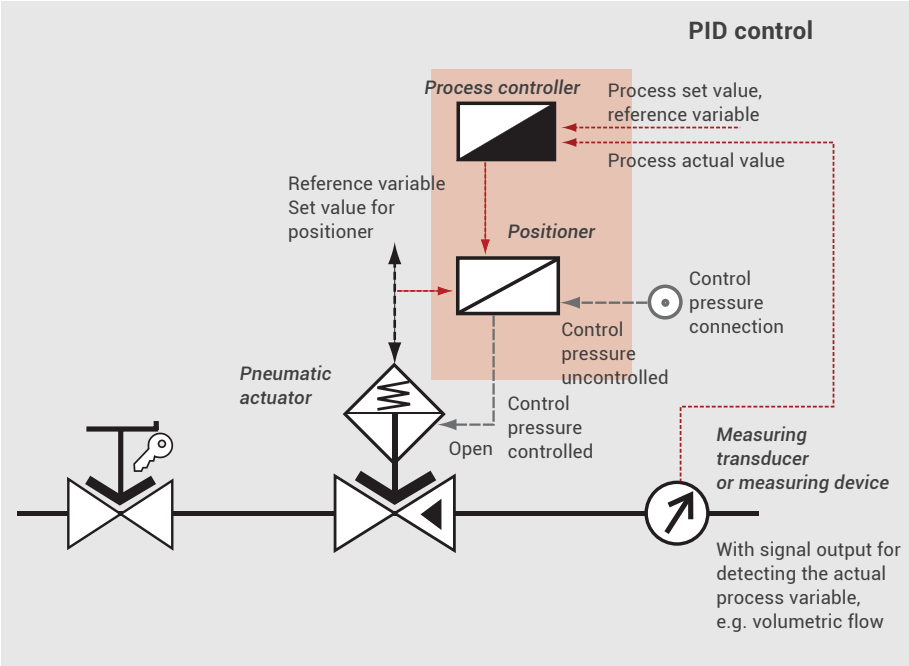

The example shows a diaphragm valve with a pneumatic membrane actuator in control function "normally closed" (single acting) and a manually operated/lockable diaphragm valve.
In the regulation of volume/mass flow, the measuring element (actual value transmitter) should be positioned before the valve.
In this way the volume flow on the measuring instrument is damped so that the control does not experience sudden measuring step jumps.
The actual value transmitter must be positioned after the valve in pressure and temperature controls.

Basic terms of control technology

Open loop control

Control is to be understood as a process in which one or more process variables are influenced by one or more input variables of a system. The momentary state of the system is not normally taken into account. A control is an open action circuit without an automatic set-actual comparison. Faults are not detected by the system.

Example: To fill a container with a constant drain, a valve with its actuator, is opened. The filling level and the filling speed can be influenced by the position of the valve. When the desired filling level has been reached or the filling speed is to be changed, the valve must be actuated again. By monitoring the process over a certain period of time and repeatedly readjusting the valve position, it will be possible to keep the filling level constant after a certain time. However, this example works only if the process does not change.

Closed loop control

In a closed loop the actual value and the controlled variable of a system is measured continuously and compared with the set value, the reference variable. The difference between these two variables is the control difference or the control error. Depending on the measured difference, a positioning process is initiated to adapt the control difference to the command variable. Regulation is therefore a closed loop process.

Discontinuous control

A process which takes place step by step is known as discontinuous control. The correcting variable on the controller jumps back and forth between discrete values. Depending on how many states the correcting variable can adopt, it refers to two, three or multi-point controllers. A two-point controller only has 2 switching states, "OPEN" and "CLOSED". Due to the erratic switching of the controller, the controlled variable fluctuates within a certain range around the set value. By installing energy stores and correct setting of time constants, the controlled variable can be kept constant without too great a fluctuation even in discontinuous control. However, this also strongly depends on the controlled system to be designed, any disturbance variables and the selection of the actuators and sensors.

The fluctuation width of the controlled variable depends on different factors (e.g. reaction time of the control circuit, characteristic of the valve).

Continuous control

Continuous controllers intervene continuously in the process and influence the actuator accordingly. The positioning process runs permanently. The correcting variable of the controller can adopt any value within the given fluctuation width.

A sensor measures the process variable continuously and passes on the signal to the controller. This compares it with the set value and influences the valve position accordingly.

Basic terms of control technology

Position control/positioner

In position control, the positioner only influences the actuator, e.g. the position of the valve. The sensor reports the controlled variable to a PLC. This compares it with the command variable, calculates the control difference and passes on an appropriate correcting variable to the positioner. This responds accordingly and changes the position of the valve. This variant for controlling valves is selected when a master control is available.

Process control/process controller

In a process controller, the controlled variable is reported directly to the controller which is installed locally at the valve or in a local control cabinet for example. This unites the functions of PLC and positioner. It calculates the controlled variable and passes on an appropriate signal to the valve. Modern process controllers can be set both on site on the system and by a PLC.

The design of a control circuit, the corresponding system layout and the selection of all the necessary components also depends on the control accuracy being aimed at. The narrower the tolerances of the control the more precisely the components operate and the higher the reproducibility has to be. Narrow tolerances for a control mean that the valve must be selected and designed very carefully:

- Exact calculation of the necessary minimum and maximum Kv value
- Design of the valve and the control fitting to this optimum control range
- Jolt-free actuator without slipping-sticking effect
- Long stroke distance at simultaneously low cross-sectional increase at the valve seat
- The valve should only be used for controlling, a stop function (close-tight) should be covered by an additional on/off valve
- Selection of the right controller type and controller
- Exact determination of positioner and valve

The greater the accuracy of the control, the higher the costs for the components and commissioning as a rule. Under certain process conditions, high-precision controls can only be implemented after substantial effort. For this reason, you should consider very carefully in advance planning how accurate the control must be.

Controlled variable x (actual value):
The variable to be controlled in a process is referred to as x. Controlled variables in plant construction are, for example, temperature, pressure, flow, pH value, hardness.

Command variable w (set value):
The command variable indicates the value which the process variable should adopt. Its value in the form of an electrical variable (current or voltage), for example, is compared with the controlled variable x.

Control difference e = w-x
The control difference is the difference between the controlled variable and the command variable. It is the input variable for the controlled element. The control error is exactly the same size as the control difference but with the inverse sign.

Correcting variable y
The correcting variable is the output variable of the controller and has a direct influence on the actuator. It depends on the control parameters of the controller and the control error.

Disturbance variable z
Factors which have an undesirable influence on a process and therefore change the controlled variables are referred to as disturbance variables.

Positioning range yh
The correcting variable y of a controller is within the positioning range. This can be defined accordingly depending on the controller used.

Positioning element
The positioning element influences the process to match the controlled variable to the command variable. Positioning elements in plant construction are, for example, valves, pumps, heat transfer elements.

Controlled element
The controlled element creates the correcting variable from the control difference. The controlled element is part of the controller.

Dead zone
If a controlled variable only reacts to the changes at the actuator after a certain time, we refer to controlled systems with dead zone. Examples of such controlled systems are the pressure control of compressible media or the continuing flow of a medium from a pipe into a container after a valve has been closed.

Energy store
Control processes may run with delays due to the energy stores occurring in every controlled system. This is clearly seen in heating processes. Pipes, containers and valves have to also achieve a temperature increase. At the same time, the energy loss to the environment increases with rising Δt. Energy stores have a damping effect on the temperature rise in the system in this case.

Basic terms of control technology

Controlled systems are basically characterised by their time behaviour. This determines the effort and the accuracy with which a control task can be solved. The jump response of the controlled system is used to represent this system dynamic. The jump response shows how the controlled variable reacts to changes in the correcting variable. Controlled systems are divided into four basic types by their timing. At the same time, a distinction must be made between systems with compensation and systems without compensation. In systems with compensation a new final value is set whilst systems without compensation do not achieve a new balanced state.

P controlled systems

In P controlled systems, the controlled variable always changes proportionally to the correcting variable. Adaptation takes place without a time delay.

I controlled systems

An I controlled system exhibits an integral behaviour and has no compensation. The controlled system does not achieve a balanced state if the correcting variable is not zero. The correcting variable changes continuously so that the controlled variable rises or falls permanently.

Systems with dead zone

In controlled systems with dead zone, the controlled variable only reacts to the positioning intervention after a certain delay. This frequently leads to oscillations, especially when the controlled variable and the correcting variable change periodically in relation to each other and offset to the dead zone. Dead zones are usually caused by the process or the system design (lead times, lag times, positioning of the sensor, controller and actuator etc.). Many of these influential variables can be optimised by appropriate system planning for control-technical requirements. Everything else must be influenced by an appropriate design of the control circuit.

Systems with energy stores

Control processes may run with delays due to the use of energy stores occurring in every controlled system. This is clearly seen in heating processes. Pipes, containers and valves have to also achieve a temperature increase. At the same time, the energy loss to the environment increases with rising Δt. Energy stores have a damping effect on the temperature change in this case. Compensation vessels and air dampers in hydraulic systems, for example, have the same effect, they delay the change in pressure.
Whether and to what extent the energy stores influence the control dynamic is different in every system. It may be ignored in the design of the control circuit depending on the influence on the control circuit.
Complex controlled systems are usually a mixture of the four above basic types with and without compensation. For this reason the most common controllers are also combinations of the types described above.

Controller selection and controller design

It is important to conduct an exact analysis of the system to design the control circuit. Make sure that valves are only assigned one function in a control circuit to guarantee perfect design and operation. The selection of the controller depends on the controlled system (integral or proportional), the delays and energy stores, the desired speed of the control and whether a remaining control error is acceptable.

The following brief characteristics can be used as a rough guideline:

- P controllers are used in easy to control systems in which a remaining control difference is acceptable.
- I controllers are suitable for systems with a low control dynamic. The systems should not contain any long delays.
- PD controllers are suitable for systems with large delays in which a remaining control error is not a problem.
- PI controllers achieve a dynamic control behaviour. They can also be used for systems with delays.
- PID controllers are always used when the operating time of a PI controller is insufficient in systems with longer delays. PID controllers are the fastest and most accurate controllers for complex control tasks.

Controlled element	Control error	Actuating speed
P	permanent	fast
I	idle	slow
PD	permanent	very fast
PI	idle	fast
PID	idle	very fast

Control tasks

The following table gives you an initial idea of which controls are to be preferred for different applications. It is only a rough guide, every controlled system must be designed to meet the requirements of the actual plant.

Application	Controller type		
	P	PI	PID
Pressure	●	+	+
Flow	-	+	●
Filling level	+	-	-
Temperature	●	+	+
pH value	●	+	+

- unsuitable
● only conditionally suitable
+ suitable